2 The YAR15 SERIES MARINE RADAR

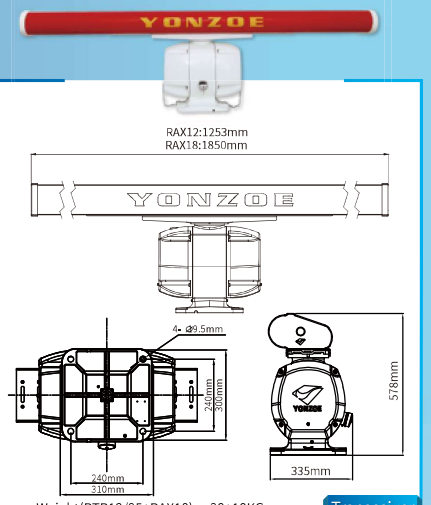

Transceiver

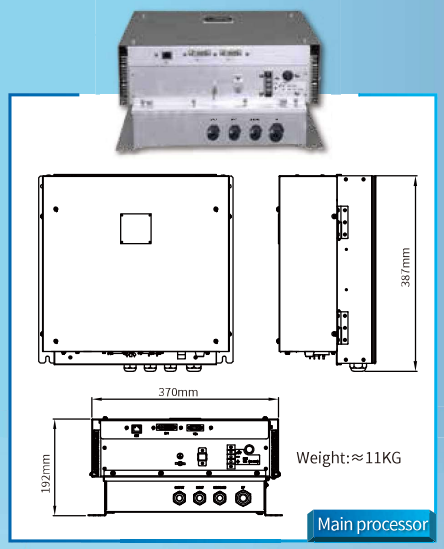

Main processor

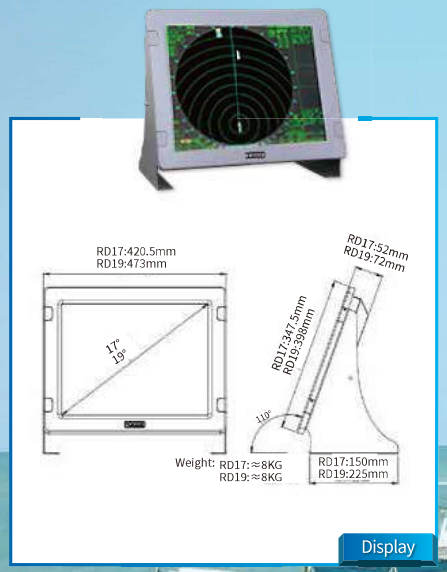

Display

Keyboard and Track-ball Mouse

Features

- Higher cost performance, real worth to use.
- Advanced noise and clutter suppression technology, good ability to detect small targets.
- Good performance in wave and rain suppression.
- Relative and true trail functions, easy to find moving targets.
- Up to 80 ARPA targets,and 1 000 AIS targets.
- Nav-line function.
- Bilingual between Chinese and English.
- Optional built-in radar performance monitor(PM).

SPECIFICATIONS

Antenna & Scanner Unit

Name	Parameters		
Range	0.125～72NM		
Minimum range	25m		
Range resolution	25m		
Range accuracy	±1% of range, or 30m, which is greater		
Azimuth accuracy	±1°		
Azimuth discrimination	2.1°(1.2m antenna) or 1.6°(1.8m antenna)		
Antenna Type	Slotted waveguide array		
Antenna rotation	24RPM		
Wind resistant	100kn Relative velocity		
Antenna	Typel	RAX12B	RAX18B
	length	120cm	180cm
	Beam-width(H)	1.85°	1.35°
	Beam-width(V)	22°	22°
	Side lobe within ±10°	-24db	-28db
	Side lobe outside ±10°	-30db	-32db
Frequency	9410±30MHz (X-band)		
Transmitter power	Type	RTR12B	RTR25B
	Power	12.5kW	25kW
Modulation	FET switching mode		
IF	60MHz		
Band width	30MHz (0.08μs, 0.15μs), 10MHz (0.5μs) , 3MHz (1.0μs)		
NF	＜6.0dB		
Frequency	9410±30MHz (X-band)		
Power			
Nominal voltage	24VDC		
Supply voltage range	18.0VDC～36.0VDC		
Nominal current	10A		

Display & Processor Unit

Name	Parameters	
Display size	RD17B	RD19B
	17"	19"
Effective radar diameter	260mm	290mm
Resolution	1280×1024	1280×1024
Radar image color	yellow, green, white, or Multi-color, in 32 levels gray.	
Language	Chinese/English selectable.	
Display mode	Heading up Heading up true bearing North up North up true motion Course up	
Relative and ground true trail	15s-25min selectable, can be switched off	
ARPA Qty	Automatic or manual acquisition up to 80 targets,0.1NM-24NM	
AIS Qty	Up to 1000 targets	
TT Target tracking data format	IEC61162-1 Ed.2	
VDR Interface	VGA	
Display interface	DVI	
Navigation device interface	AIS,compass, Navigator,log	

* RPM-X is optional